Sewing Machines Parts Catalogue and Service Manual

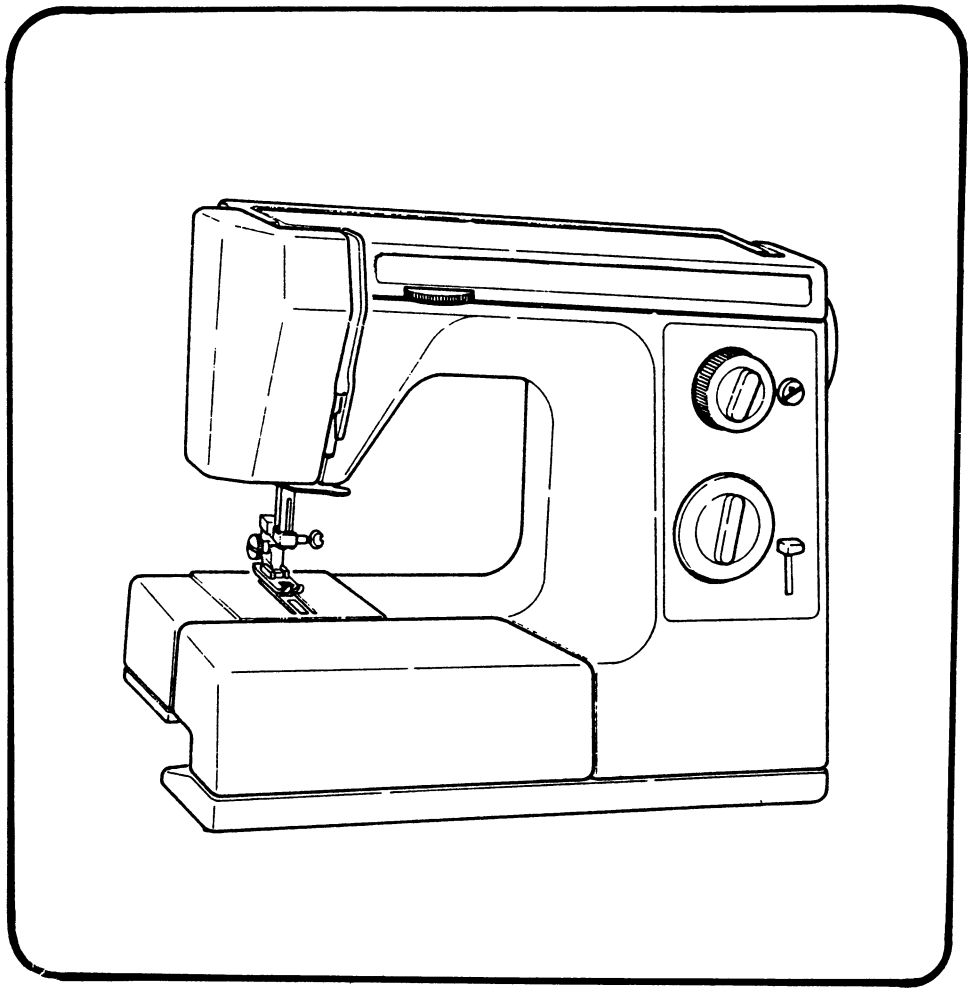

Model 1523-1577-1599

HOW TO USE THIS PARTS CATALOG

1. This Parts Catalog has been make up on the basis of August, 1988.

2. Please do not use the index number for ordering as this number will be repeated on different pages.

3. When ordering, use the White number near the index number, Example: ⑥ Face Cover use number 6773. When ordering a part without a White part number, Example: ⑨ Hinge Assembly use the Reference # 150001-330B.

Thank you,

White Sewing Machine Co.

CONTENTS

1. Machine Body Component Parts 1
2. Needle Bar Parts 5
3. Presser Bar Upper Thread, Parts 7
4. Upper Shaft, Lower Shaft, Shuttle Hook Parts 11
5. Feed Regulating Parts 13
6. Zigzag Generating Parts 15
7. Specific Parts 19
8. Accessories 23
9. Service Manual 25

1. Machine Body Component Parts —①

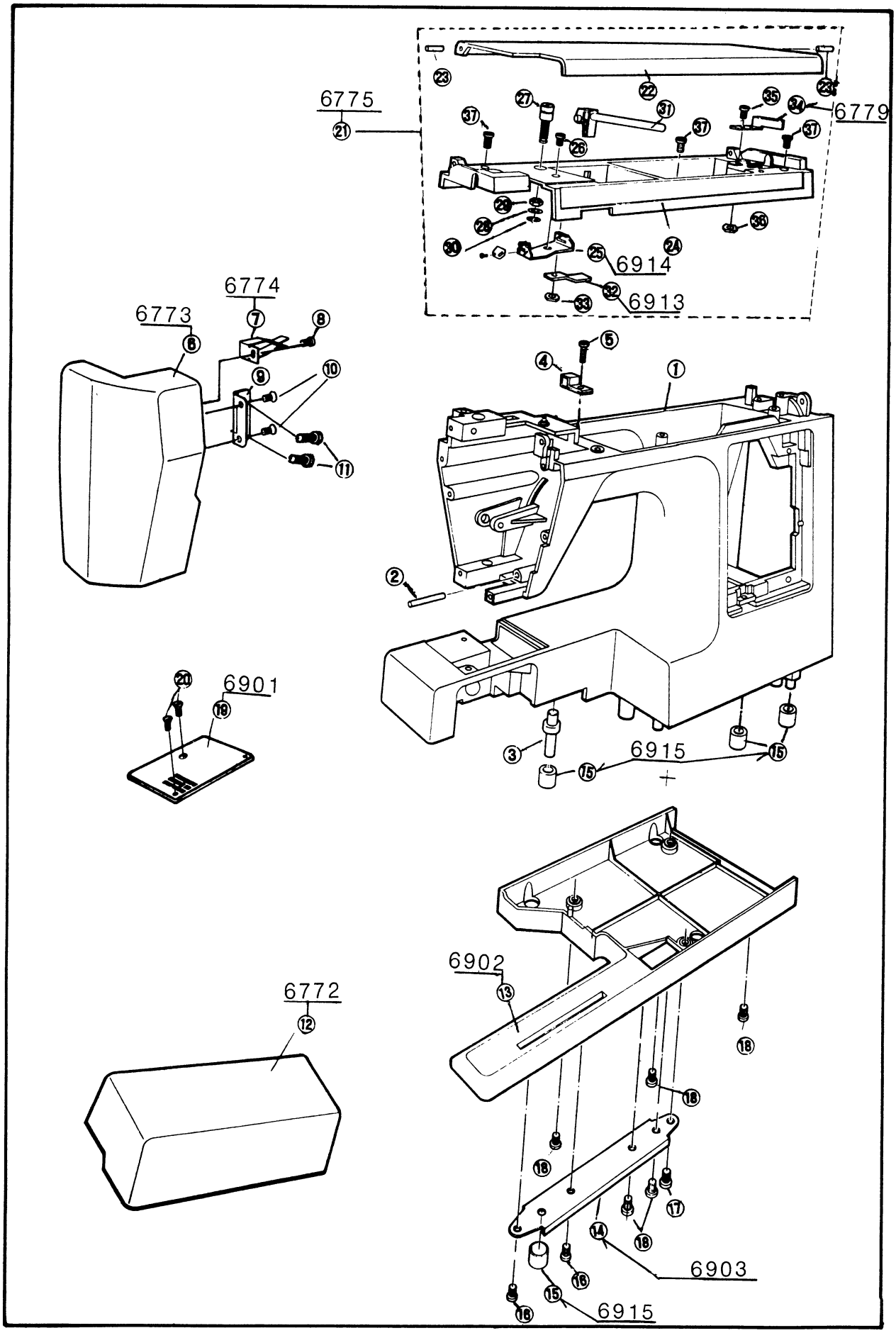

INDEX NO.	REF. NO.	PART NAME	QTY	MODEL NO.					NOTE
				EX-1,U					
1.	1150011-110	Arm Ass'y	1						
2.	1150002-347-C	Guide Pin	1						
3.	1150001-184-A	Rubber Foot Pin	1						
4.	150008-142	Cord Guide	1						
5.	10955	Set Screw For No. 4	1						
6.	1150021-321	Face Couer	1						
7.	1150001-325-A	Face Cover Stopper	1						
8.	10957	Set Screw For No. 7	1						
9.	150001-330-B	Hinge Ass'y	1						
10.	11404	Set Screw For No. 9	2						
11.	10914	Set Screw For No. 6	2						
12.	1150001-164	Assistance Bed	1						
13.	1150001-171-A	Base Plate	1						
14.	1150001-180-A	Assistance Foot Ass'y	1						
15.	1150001-152	Rubber Foot	4						
16.	10955	Set Screw For No. 14	2						
17.	10946-B	Set Screw For No. 14	1						
18.	10946-B	Set Screw For No. 13	5						
19.	1150001-511	Needle Plate	1						
20.	10401	Set Screw For No. 19	2						
21.	1150001-310	Top Cover Ass'y	1						
22.	1150001-311A	Top Cover	1						
23.	50401-A	Spring Pin	2						
24.	1150001-169-A	Accessory Box	1						
25.	1150002-170-A	Thread Guide No. 1	1						
26.	10962	Set Screw For No. 25	1						
27.	115002-680	Thread Guide Ass'y	1						
28.	60111	Flat Washer	1						
29.	30403	Adjustable Nut	1						
30.	40109	E-Ring	1						
31.	1150002-181	Spool Pin	1						
32.	1150002-191	Spool Pin Spring	1						
33.	30108A	Nut	1						
34.	1150002-626	Bobbin Winder Stopper	1						
35.	10962	Set Screw For No. 34	1						
36.	30108-A	Nut	1						
37.	10961	Set Screw For No. 21	3						

2. Machine Body Component Parts —②

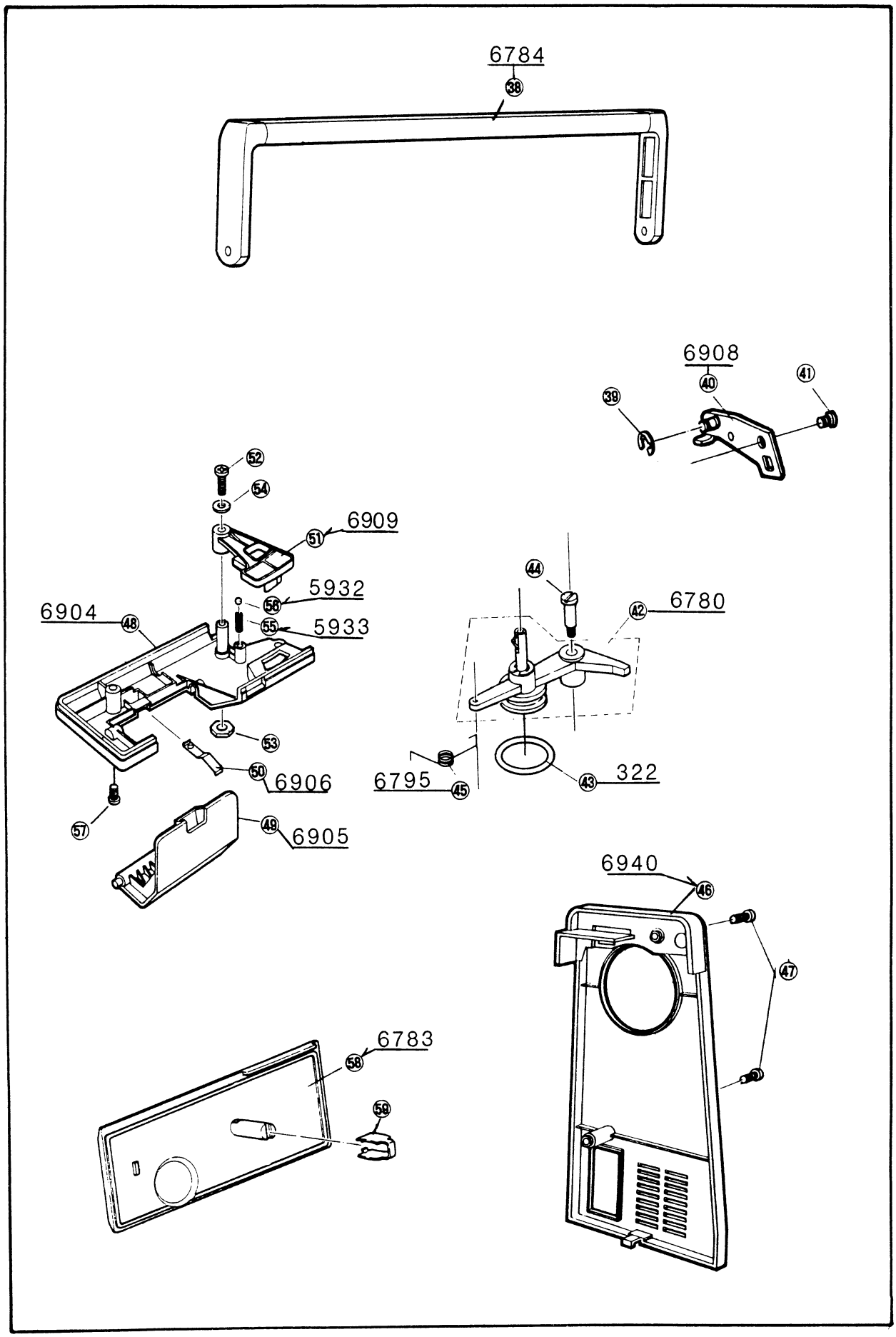

INDEX NO.	REF. NO.	PART NAME	QTY	MODEL NO.					NOTE
				EX-1.U					
38.	1150001-371-A	Handle	1						
39.	40110	E-Ring	1						
40.	1150001-380A	Handle Holder Plate Ass'y	1						
41.	10946-B	Set Screw For No. 40	1						
42.	1150002-601	Bobbin Winder Frame Ass'y	1						
43.	710002-632	Rubber Ring	1						
44.	150002-623-A	Bobbin Winder Spindle	1						
45.	150002-644-C	Bobbin Winder Frame Spring	1						
46.	1150011-390	Motor Cover Ass'y	1						
47.	10964	Set Screw For No. 46	2						
48.	1150001-162	Bed Cover No. 1	1						
49.	1150001-163	Bed Bover No. 2	1						
50.	550001-382	Bed Bover Spring	1						
51.	550004-762	Drop Requlating Knob	1						
52.	10933	Set Screw For No. 51	1						
53.	30101-A	Nut	1						
54.	60108	Flat Washer	1						
55.	150007-519	Drop Knob Spring	1						
56.	90202	Steel Ball	1						
57.	10946-B	Set Screw For No. 48	1						
58.	1150001-352	Back Cover	1						
59.	350004-342-A	Back Cover Spring	1						

2. Needle Bar Parts

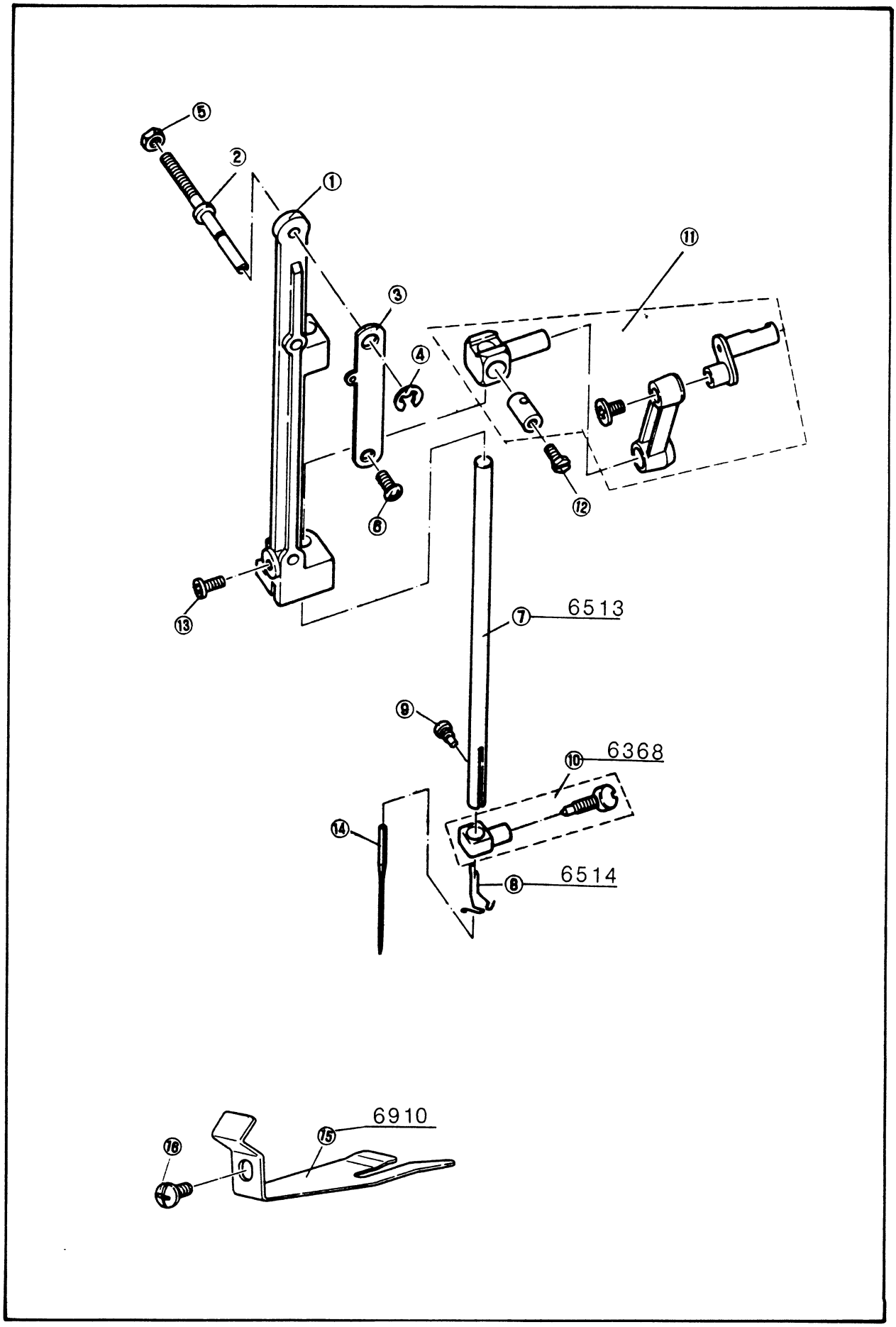

INDEX NO.	REF. NO.	PART NAME	QTY	MODEL NO.					NOTE
				EX-1,U					
1.	1150012-331-A	Needle Bar Support	1						
2.	1150002-332	Needle Bar Support Shaft	1						
3.	1150002-335-A	Needle Bar Support Spring	1						
4.	40102-A	E-Ring	1						
5.	30403	Adjustable Nut	1						
6.	10941-B	Set Screw For No. 3	1						
7.	1150002-311	Needle Bar	1						
8.	350002-341-C	Needle Bar Thread Guide	1						
9.	11003	Set Screw For No. 8	1						
10.	350002-343-C	Keędle Clamp Ass'y	1						
11.	1150002-300	Needle Bar Brank Ass'y	1						
12.	20105	Set Screw For No. 11	1						
13.	10941-R	Set Screw	1						
14.	150002-482-A	Needle # 14	1						
15.	1150002-337	Needle Bar Support Stopper	1						
16.	10941-B	Set Screw For No. 15	1						

3. Presser Bar Upper Thread, Parts —①

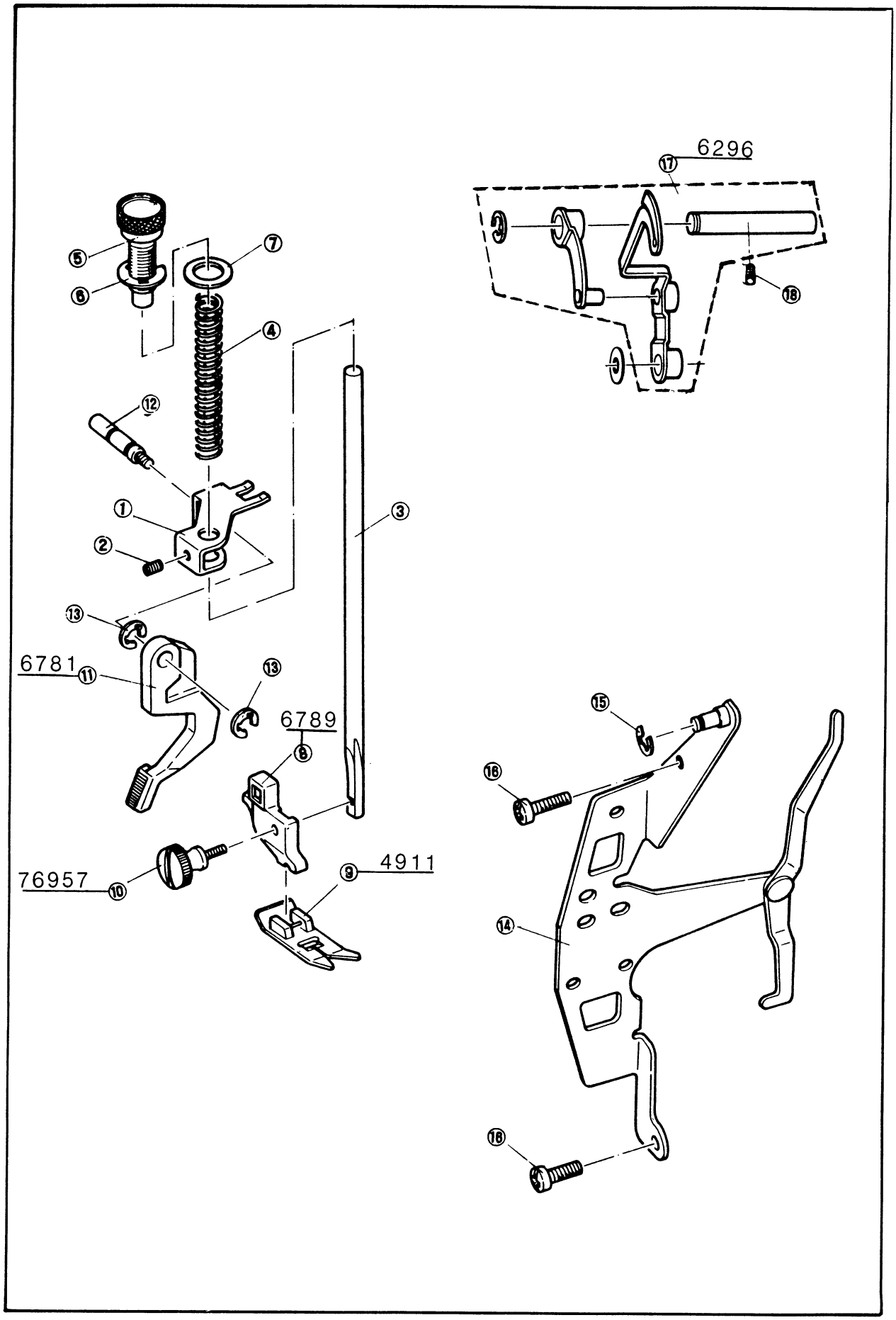

INDEX NO.	REF. NO.	PART NAME	QTY	MODEL NO.					NOTE
				EX-1.U					
1.	950002-376	Presser Bar Bracket	1						
2.	10125	Set Screw For No. 1	1						
3.	150002-361-C	Presser Bar	1						
4.	550002-362	Presser Bar Spring	1						
5.	1150002-307A	Pressure Regulator Screw	1						
6.	40105-A	E-Ring	1						
7.	60116	Flat Washer	1						
8.	950002-423	Zigzag sewing Foot Holder	1						
9.	150012-352	Zigzag Sewing Foot	1						
10.	710002-142-A	Set Screw For No. 8. 10	1						
11.	950002-366	Presser Bar Lifter	1						
12.	950002-367	Presser Bar Lifter Stud	1						
13.	40106-A	E-Ring	2						
14.	1150008-170-C	Socket Holding Plate Ass'y	1						
15.	40110	E-Ring	1						
16.	10941-B	Set Screw For No. 14	2						
17.	150002-401-A	Take-up Lever Ass'y	1						
18.	10125	Set Screw For No. 18	1						

3. Presser Bar, Upper Thread, Parts —②

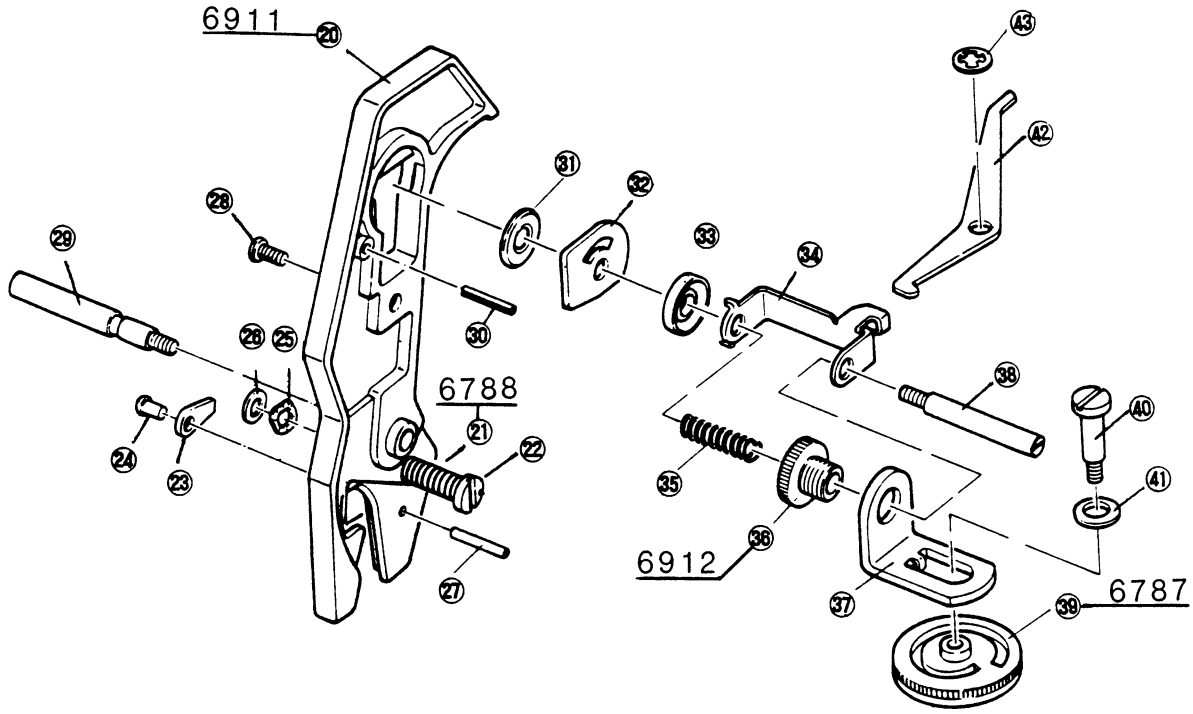

INDEX NO.	REF. NO.	PART NAME	QTY	MODEL NO.					NOTE
				EX-1,U					
20.	1150002-164-E	Thread Guide Plate	1						
21.	550002-137	Check Spring	1						
22.	1150002-135	Spring Shaft	1						
23.	1150002-146-A	Thread Guide No. 2	1						
24.	50502	Pevet	1						
25.	60405	Wave Washer	1						
26.	60101	Washer	1						
27.	50402	Spring Pin	1						
28.	10942-B	Set Screw For No. 20	1						
29.	1150002-165	Screw Stud.	1						
30.	50416	Spring Pin	1						
31.	550002-132	Tension Disc – L –	1						
32.	1150002-133	Intermediate Disc	1						
33	550002-131	Tension Disc – R –	1						
34.	1150002-156	Tension Action Plate	1						
35.	550002-138	Tension Spring	1						
36.	550002-126	Tension Adjusting Screw	1						
37.	1150002-155-C	Connecting Plate	1						
38.	1150002-124	Thread Guide Plate Stud	1						
39.	1150002-151-B	Tension Dial	1						
40.	11010	Tension Dial Stud	1						
41.	60403	Wave Washer	1						
42.	1150002-398	Tension Mediation Arm	1						
43.	40302	CS-Ring	1						

4. Upper Shaft, Lower Shaft, Shuttle Hook Parts —①

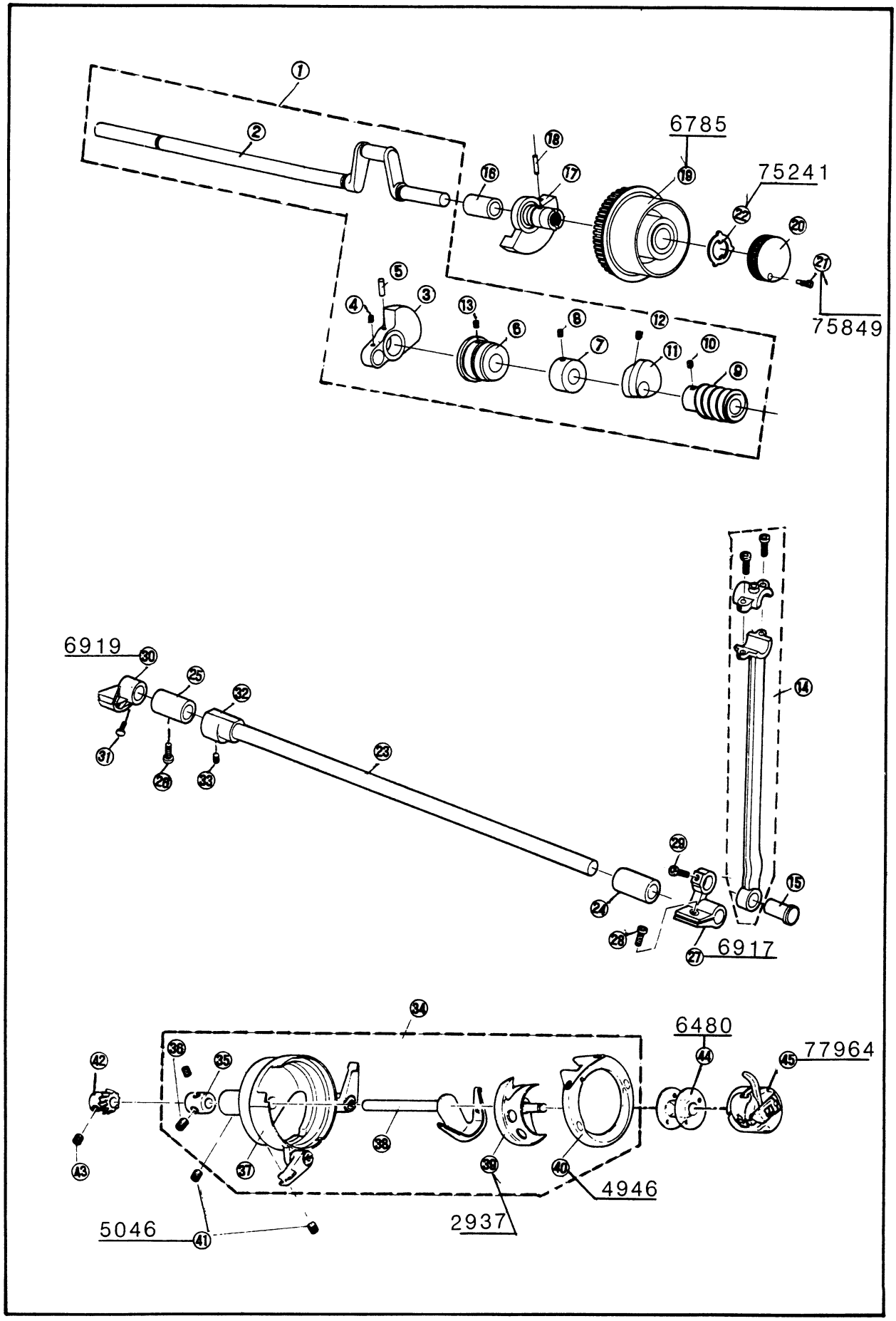

INDEX NO.	REF. NO.	PART NAME	QTY	MODEL NO.					NOTE
				EX-1,U					
1.	1150003-101-A	Upper Shaft Ass'y	1						
2	1150003-111	Upper Shaft	1						
3.	150003-131-D	Crank Weight	1						
4.	10104	Set Screw For No. 3	1						
5.	50410-A	Spring Pin	1						
6.	150003-112-E	Upper Shaft Bushing — F —	1						
7.	150003-115-D	Upper Shaft Collar	1						
8.	10104	Set Screw For No. 7	2						
9.	1150005-143-B	Worm Gear	1						
10.	10126	Set Screw For No. 9	1						
11.	150004-151-A	Feed Cam	1						
12.	10112	Set Screw For No. 11	2						
13.	10910	Set Screw For No. 6	1						
14.	550003-330-A	Crank Rod	1						
15.	150004-515-A	Hinge Pin	1						
16.	150003-114-C	Upper Shaft Bushing — R —	1						
17.	150003-161-D	Handwheel Bush	1						
18.	50409-A	Spring Pin	1						
19.	550023-151	Handwheel	1						
20.	150003-156	Stop Motion Screw	1						
21.	11502	Set Screw For No. 20	1						
22.	710003-155	Stop Motion Washer	1						
23.	1150003-541	Lower Shaft	1						
24.	150003-543-A	Lower Shaft Bushing — R —	1						
25.	150003-542-A	Lower Shaft Bushing — F —	1						
26.	10947-B	Set Screw For No. 25	1						
27.	1150003-546-A	Lower Shaft Crank	1						
28.	10942-B	Set Screw For No. 27	1						
29.	10941-B	Set Screw For No. 15	1						
30.	1150003-507	Lower Shaft Gear	1						
31.	11014	Lower Shaft Gear Stud	1						
32.	550004-715	Feed Lifting Cam	1						
33.	10104	Set Screw For No. 32	1						
34.	550003-050	Shuttle Race Ass'y	1						
35.	150003-514	Shuttle Drive Shaft Colar	1						
36.	10106	Set Screw For No. 35	2						
37.	550003-051	Shuttle Race Ass'y	1						
38.	550003-053	Shuttle Driver	1						
39.	110003-532	Shuttle Hook	1						
40.	550003-150	Shuttle Race Cover Ass'y	1						
41.	10126	Set Screw For No. 37	2						
42.	1150003-545-A	Shuttle Drive Gear	1						
43.	10124	Set Screw For.No. 42	2						
44.	950003-520	Bobbin	1						
45.	710003-560	Bobbin Case	1						

5.Feed Regulating Parts

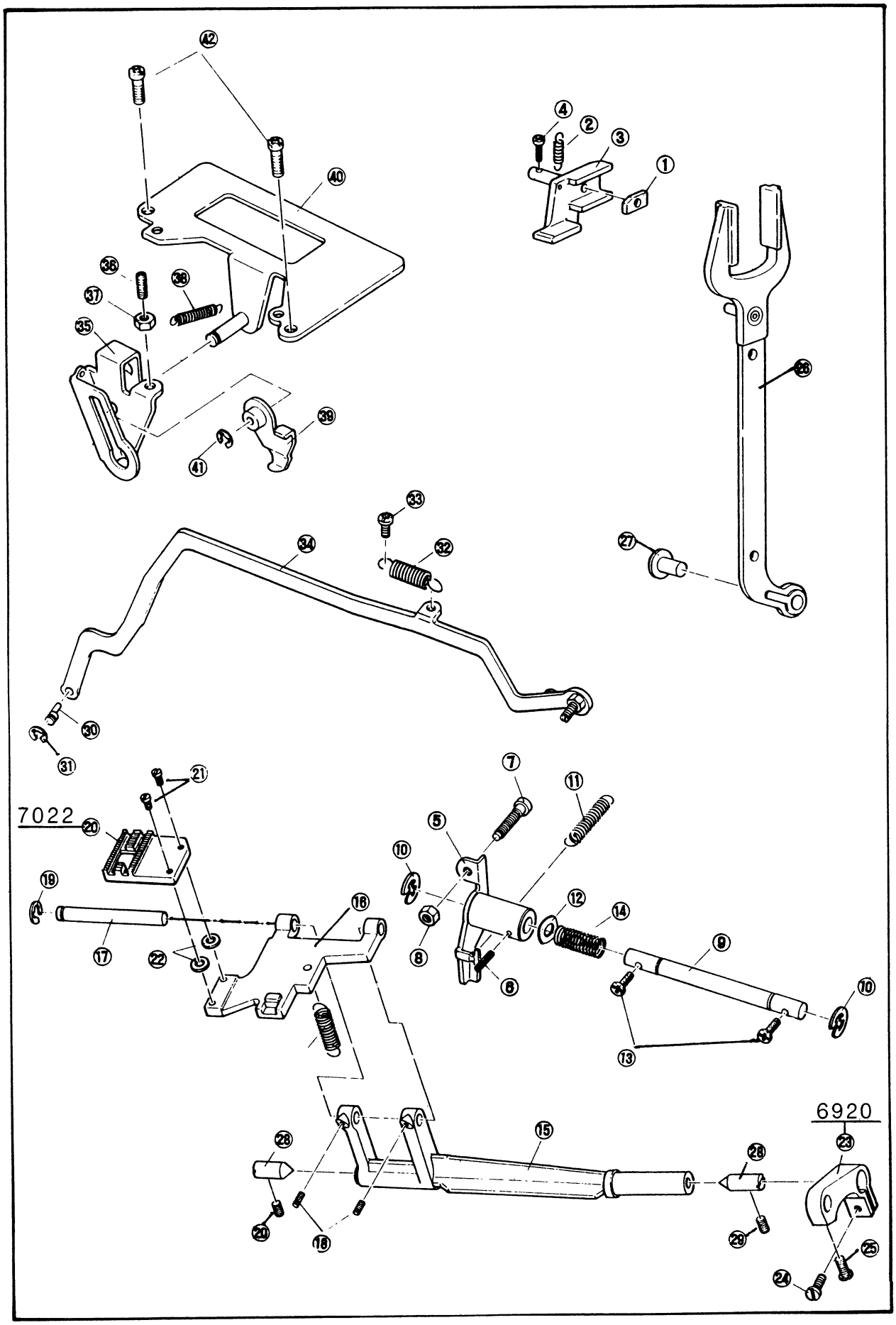

INDEX NO.	REF. NO.	PART NAME	QTY	MODEL NO.					NOTE
				EX-1,U					
1.	1150004-122	Sliding Block	1						
2.	1150004-123-A	Feed Regulator Spring	1						
3.	1150004-110-A	Feed Regulator Ass'y	1						
4.	10942-B	Set Screw For No. 3	1						
5.	550004-720	Feed Lifting Arm Ass'y	1						
6.	50402-A	Spring Pin	1						
7.	11510	Adjusting Screw	1						
8.	30403	Adjustable Nut	1						
9.	550004-711	Feed Lifting Arm Shaft	1						
10.	40101-A	E-Ring	2						
11.	550004-754	Lifting Arm Spring	1						
12.	60102	Washer	1						
13.	10932	Set Screw For No. 9	2						
14.	550004-732	Feed Bar Spring	1						
15.	1150004-511	Feed Rock Shaft	1						
16.	550004-512	Feed Bar	1						
17	150004-514	Feed Bar Shaft	1						
18.	10105	Set Screw For No. 17	2						
19.	40102-A	E-Ring	1						
20.	550004-513	Feed Dog	1						
21.	10921	Set Screw For No. 20	2						
22.	60106	Flat Washer	2						
23.	550004-521	Feed Rock Shaft Crank	1						
24.	10904-A	Set Screw For No. 23	1						
25.	10105	Set Screw For No. 27	1						
26.	1150004-141-A	Feed For Ked Rod	1						
27.	150004-515-A	Hinge Stud	1						
28.	150004-525-A	Center Pin	2						
29.	10126	Set Screw For No. 28	2						
30.	150005-512	Eccentric Pin	1						
31.	40104-A	E-Ring	1						
32.	950005-513	Connecting Rod Spring	1						
33.	10955	Set Screw For No. 30	1						
34.	1150005-510	Connecting Rod Ass'y	1						
35.	1150005-111	Zigzag Regulator	1						
36.	10128	Adjustable screw	1						
37.	30403	Adjustable Nute	1						
38.	1150005-113	Zigzag Regulator Spring	1						
39.	1150006-270-A	Zigzag Drive Arm Ass'y	1						
40.	1150005-105-A	Regulator Support Plate Ass'y	1						
41.	40104-A	E-Ring	1						
42.	10942-B	Set Screw For No. 15, 40	2						

6. Zig Zag Generating Parts —①

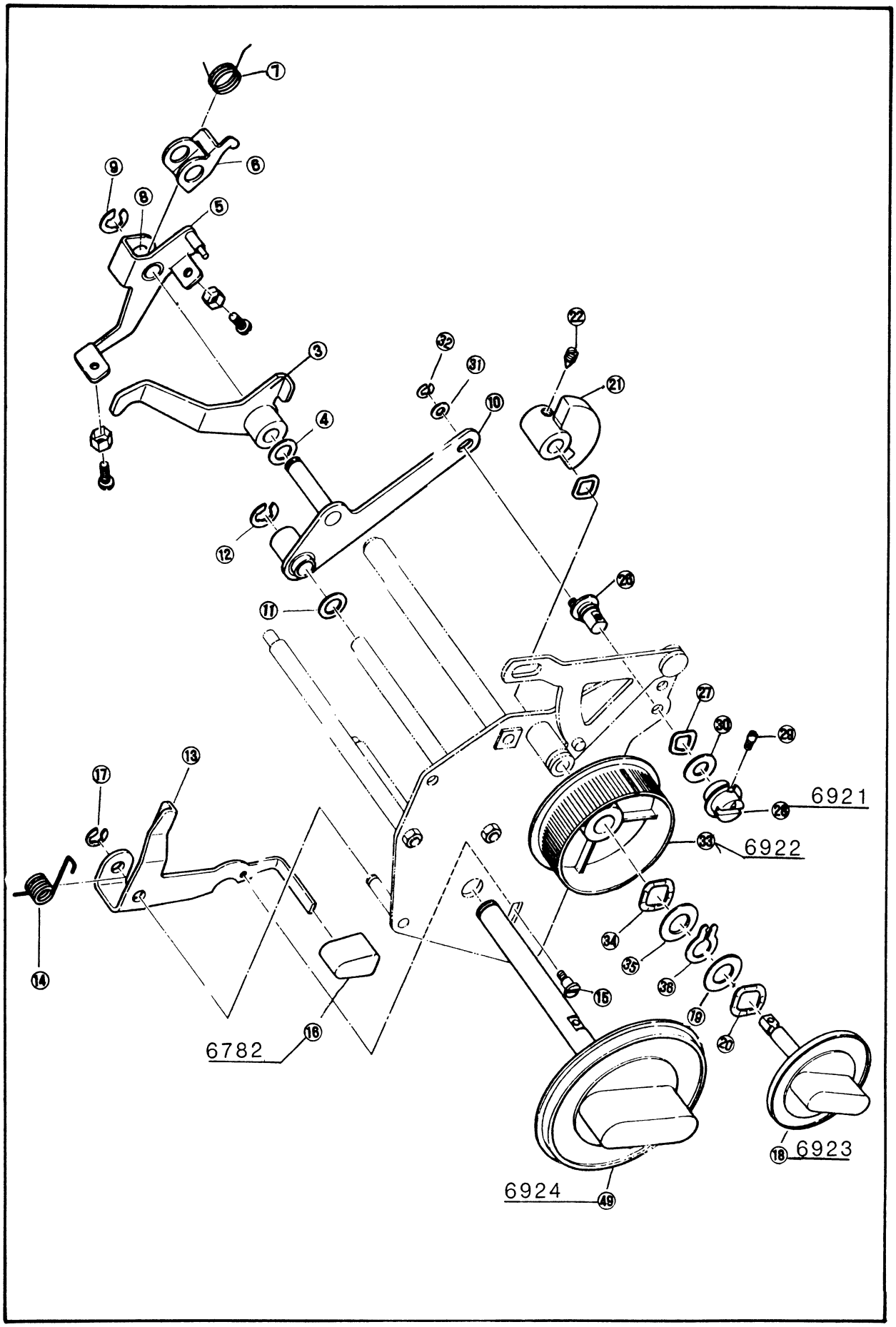

INDEX NO.	REF. NO.	PART NAME	QTY	MODEL NO.					NOTE
				EX-1.U					
1.	1150006-100	Patterm Cam Unit	1						
2.	1150006-102	Patterm Cam Mounting Base Ass'y	1						
3	1150004-130-A	Feed Adjusting Arm	1						
4.	60107	Adjustable Washer	2						
5.	1150004-350A	Feed Requlating Frame	1						
6.	1150006-611	Feed Arm	1						
7.	1150006-616-A	Feed Arm Spring	1						
8.	1150006-612	Feed Arm Roller	1						
9.	40106-A	E-Ring	1						
10.	1150004-120	Feed Slight Adjuster Arm	1						
11.	60107	Adjustable Washer	2						
12.	40106-A	E-Ring	1						
13.	1150004-362-A	Reverse Sewing Lever	1						
14.	1150004-364	Reverse Sewing Lever Spring	1						
15.	11513	Stud For No. 13	1						
16.	1150014-361	Reverse Sewing Knob	1						
17.	40104-A	E-Ring	1						
18.	1150004-316-A	Stitch Length Dial	1						
19.	60103	Flat Washer	1						
20.	60403	Wave Washer	1						
21.	1150004-112-A	Feed Adjusting Cam	1						
22.	20305	Set Screw For No. 21	1						
23.									
24.									
25.									
26.	1150004-118-A	Feed Slight Adjuster Shaft	1						
27.	60403-A	Wave Washer	2						
28.	1150004-117-B	Stitch Length Knob	1						
29.	11514	Set Screw For No. 28	1						
30.	60117	Flat Washer	1						
31	60111	Flat Washer	1						
32	40102-A	E-Ring	1						
33	1150007-523-B	Zigzag Width Control Dial	1						
34.	60406-A	Wave Washer	1						
35.	60130	Flat Washer	1						
36.	40305	C-Ring	1						

6.Zig Zag Generating Parts —②

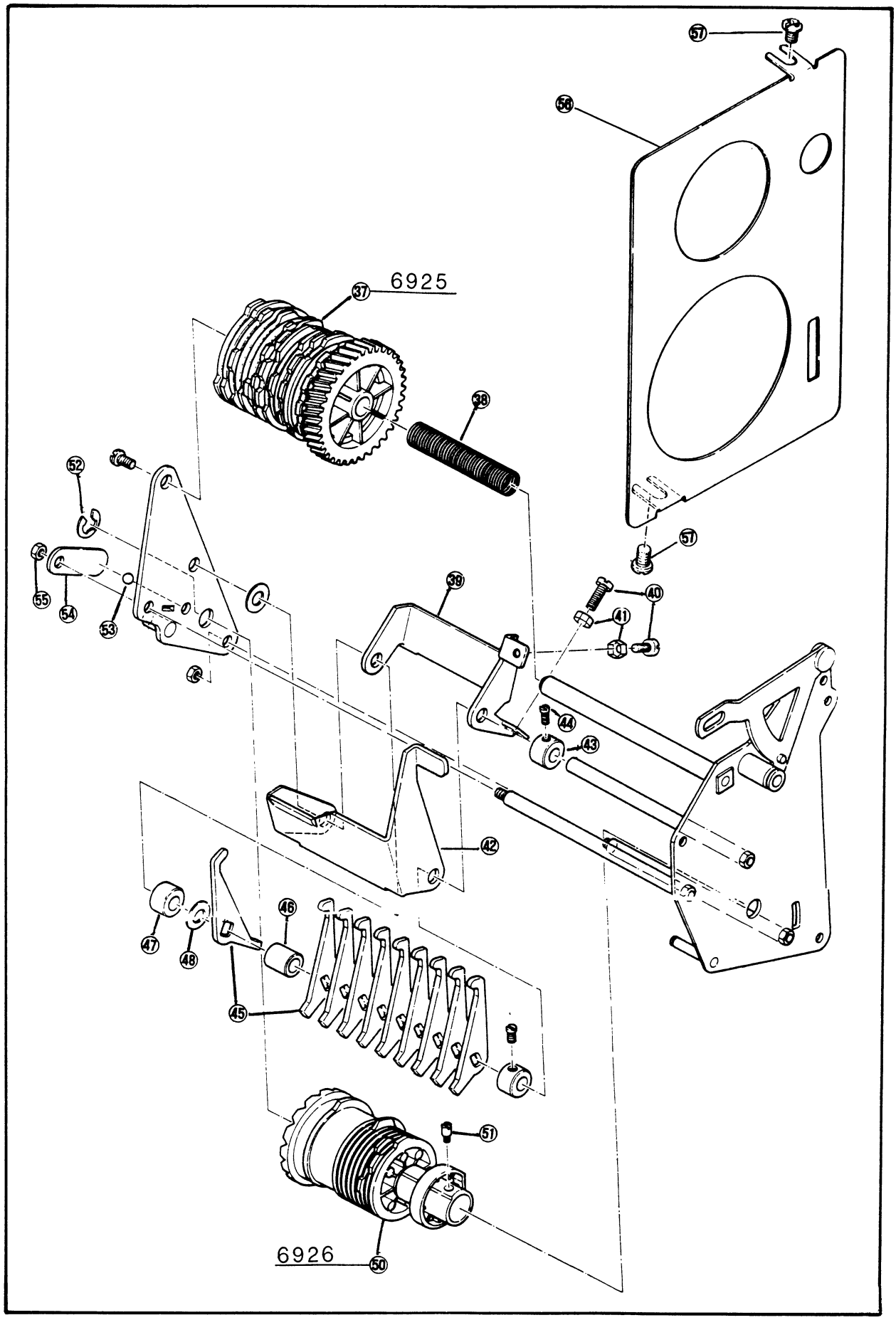

INDEX NO.	REF. NO.	PART NAME	QTY	MODEL NO.					NOTE
				EX-1.U					
37.	1150006-110	Pattern Cam	1						
38.	1150006-119	Pattern Cam Fix Spring	1						
39.	1150006-671-A	Feed Finger Guide	1						
40.	10939-A	Adjustable Screw	2						
41.	30403	Adjustable Nut	2						
42.	1150006-143	Width Finger Guide Plate	1						
43.	150006-375-B	Finger Guide Coller	2						
44.	10804	Set Screw For No. 43	2						
45.	1150006-124	Contacting Finger	10						
46.	1150006-164	Spacer – L –	1						
47.	1150006-165	Spacer – S –	1						
48.	60121-A	Flat Washer	2						
49.	1150007-521-A	Pattern Selecting Dial	1						
50.	1150006-531	Selecting Cam	1						
51.	11008	Set Schew No. 50	1						
52.	40103-B	E-Ring	1						
53.	90201	Steel Ball	1						
54.	1150007-519-A	Spring	1						
55.	60111	Flat Washer	1						
56.	1150007-131-B	Panel Bracket	1						
57.	10941-B	Set Screw For No. 56	2						

7. Specific Parts —①

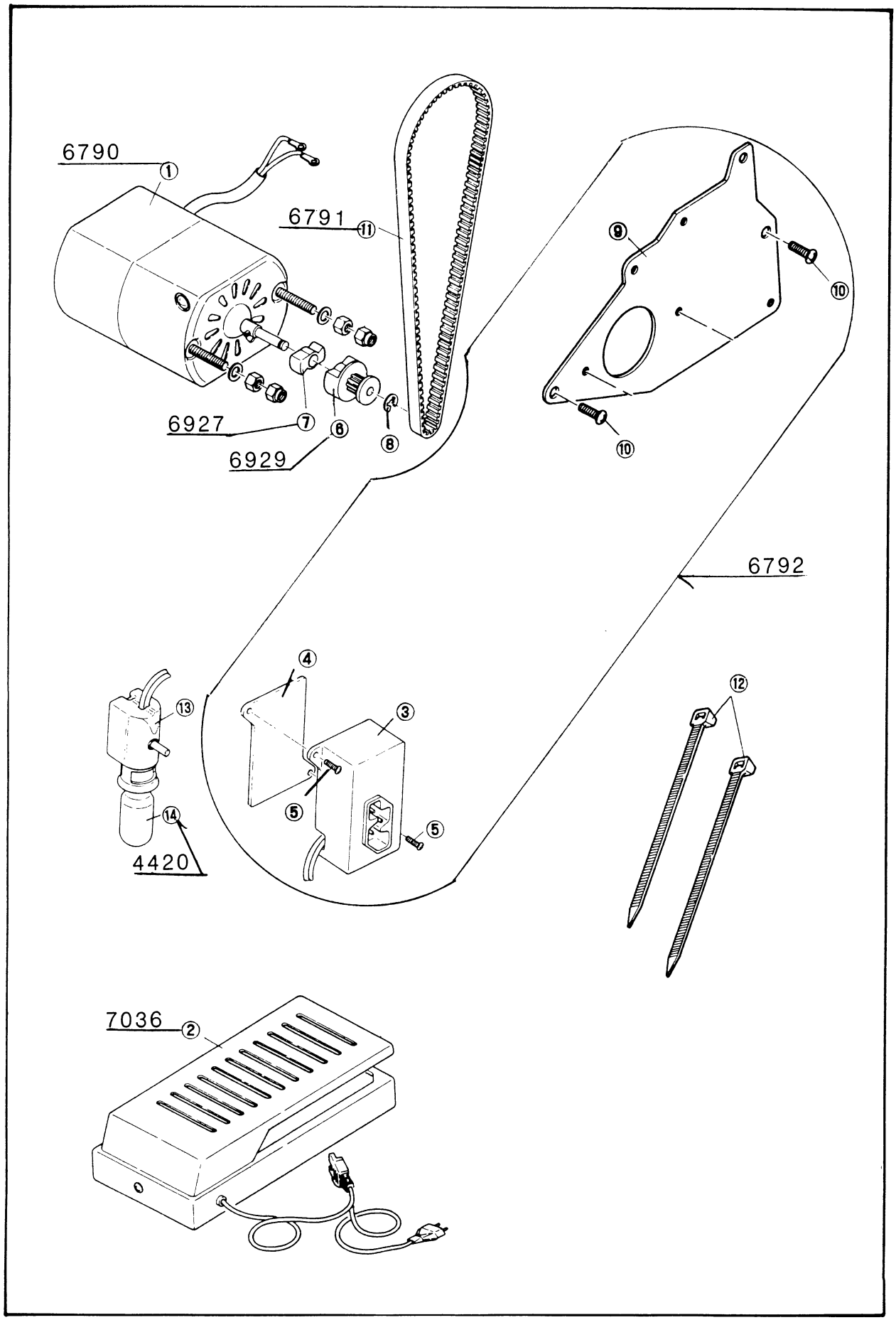

INDEX NO.	REF. NO.	PART NAME	QTY	MODEL NO.					NOTE
				UK	USA	CAN			
1.		Motor Ass'y			–	–			
	1150008-83 5	↑	1	–	○	–			
	1150018-83 5	↑	1	–	–	○			
2.	150088-834-F	Controller Ass'y	1	○	–	–			
	1150008-834	↑	1	–	○	–			
	1150018-834	↑	1	–	–	○			
3.	1150008-838-A	Rece Ptacle	1	○	○	○			
4.	1150008-846-A	Rece Ptacle Cover	1	○	○	○			
5.	10964	Set Screw For No. 4	2	○	○	○			
6.	550008-844B	Motor Paller	1	○	○	○			
7.	550008-842	Cushion Rubber	1	○	○	○			
8.	4010Z	E-Ring	1	○	○	○			
9.	1150008-824-A	Motor Bracket	1	○	○	○			
10.	10946-B	Set Screw For No. 9	2	○	○	○			
11.	620008-843	Timing Belt	1	○	○	○			
12.	950008-848	Cord Binder	2	○	○	○			
13.	550028-110	Lampholder Ass'y	1	○	–	–			
	1150008-110-A	↑	1	–	○	○			
14.	550008-116	Bulb	1	○	–	–			
	150018-116		1	–	○	○			

7. Specific Parts —②

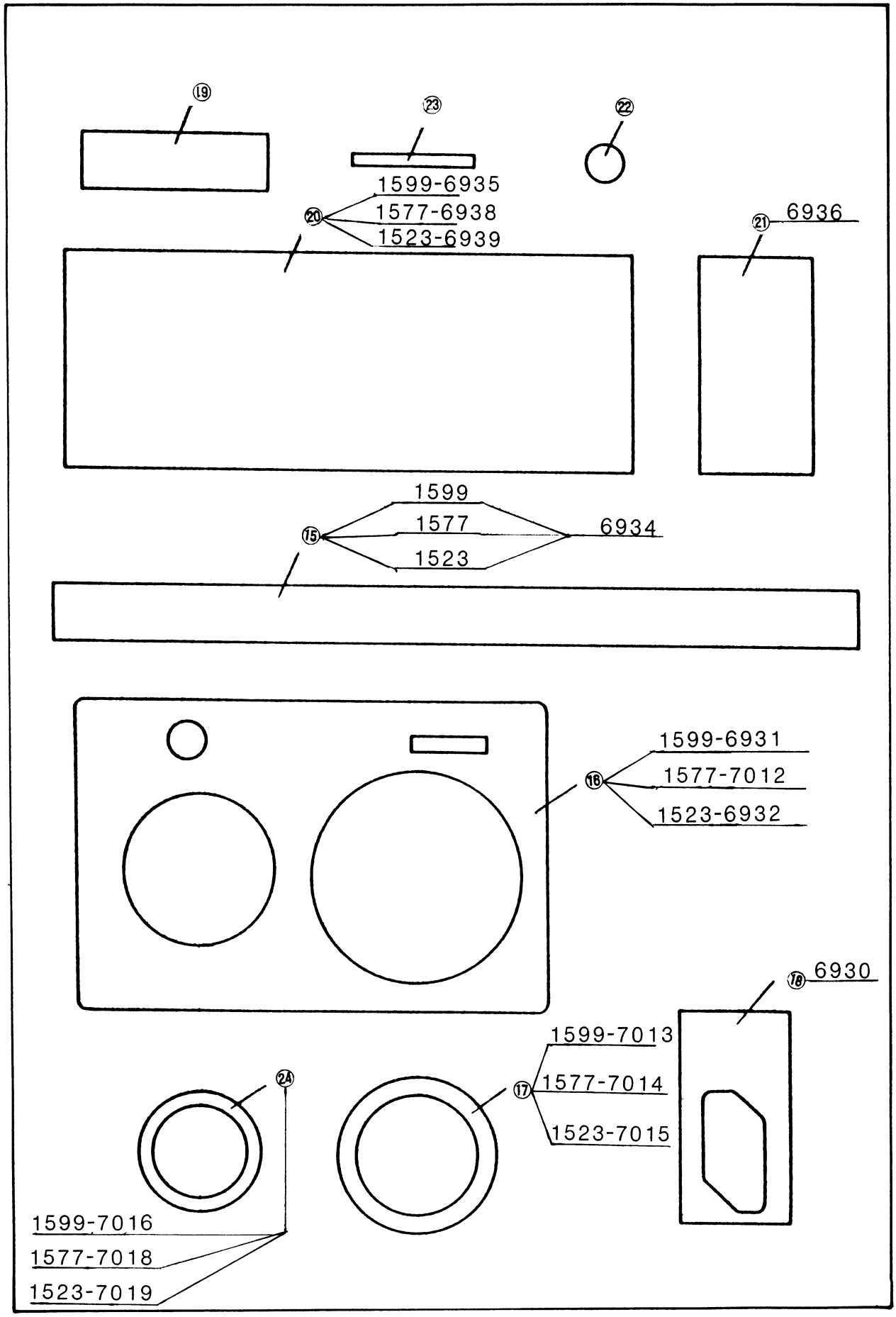

INDEX NO.	REF. NO.	PART NAME	QTY	MODEL NO.					NOTE
				UK	USA	CAN			
15.	1110009-154	Top Cover Panel	1	O	–				
	1150019-154-A	↑	1	–	O				
16.	1150027-113	Arm Panel	1	O	–				
	1150017-113-A	↑	1	–	O				
17.	1150027-177	Dial Panel	1	O	–				
	1150017-177	↑	1	–	O				
18.	1150038-836	Power Supply Plate	1	O	–				
	1150028-836	↑	1	–	O				
19.	1150029-155	Nomenclature Plate	1	O	–				
	1150019-155	Nomenclature Plate	1	–	O				
20	1110017-179	Top Cover Inside Panel (A)	1	O	–				
	1150017-179	↑	1	–	O				
21.	1150017-181	Top Cover Inside Panel (B)	1	–	O				
22	1150017-176	Pressure Regulator Panel	1	O	O				
23.	1150017-178	Drop Regulating Panel	1	O	O				
24.	1150027-171	Dial Panel	1	O	–				
	1150017-171-A	↑	1	–	O				

8. Accessories

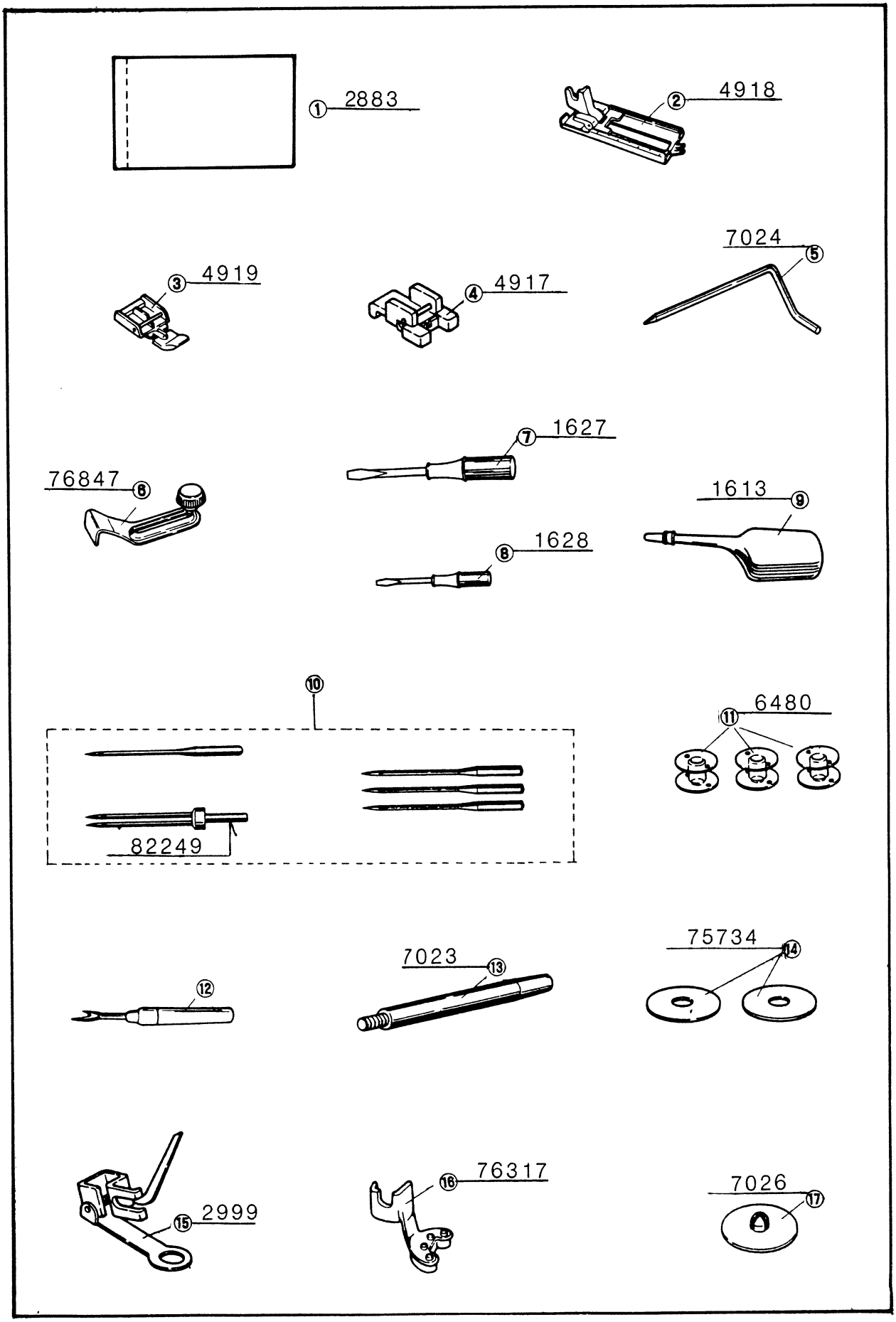

INDEX NO.	REF. NO.	PART NAME	QTY	MODEL NO.					NOTE
				UK	USA	CAN			
1.	150002-484	Vinyle Sack	1	O	O				
2.	150022-390	Button bole Seming Foot	1	O	O				
3.	950002-360	Zipper Foot	1	O	O				
4.	1150002-380	Button Sewing Foot	1	O	O				
5.	950002-355	Quilting Guide	1	O	O				
6.	719001-365	Cloth Guide	1	O	O				
7.	719001-363	Screw Driver – L –	1	O	O				
8.	719001-364	Screw Driver – S –	1	O	O				
9.	719001-368	Oiler	1	O	O				
10.	1150002-480	Needle Ass'y	1	O	O				
11.	710003-520	Bobbin	3	O	–				
	950003-520	↑	3	–	O				
12.	719001-367	Button Hole Cutter	1	O	O				
13.	1150002-187	Spool Pin	1	O	O				
14.	1150002-183	Felt	2	O	O				
15.	150002-420	Darning Foot	1	–	O				
16.	150002-357-C	Over Casting Foot	1	O	–				
17.	1150002-186	Spool Guide	1	O	O				

1. NEEDLE POSITION FOR STRAIGHT SEWING

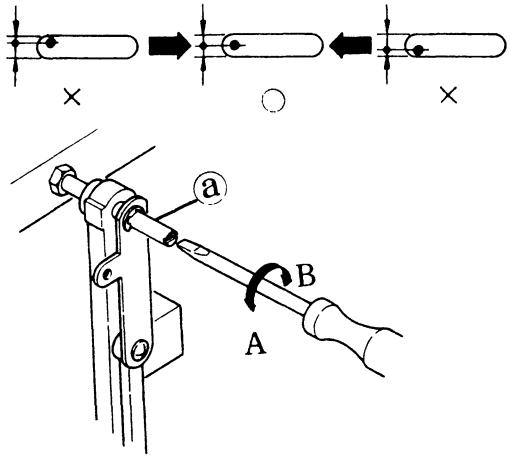

Adjust eccentric Pin ⓐ in A or B direction.

2. NEEDLE POSITION FOR ZIGZAG SEWING.

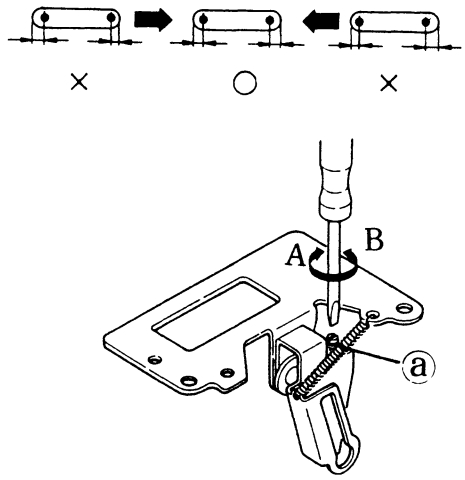

Adjust eccentric Pin ⓐ in A or B direction.

3. LATERAL MOTION OF THE NEEDLE BAR.

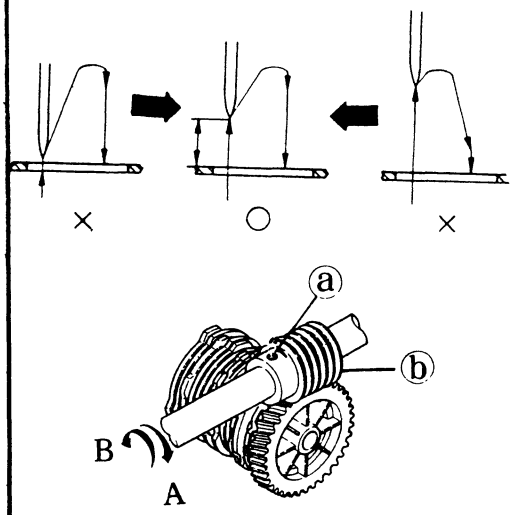

1) Loosen Screw ⓐ
2) Hold Worm gear ⓑ
3) Turn balance wheel in the working direction, refering to the diagram.
4) Check for backlash after adjusting.
5) Tighten screw ⓐ

4. NEEDLE AND HOOK CLEARANCE.

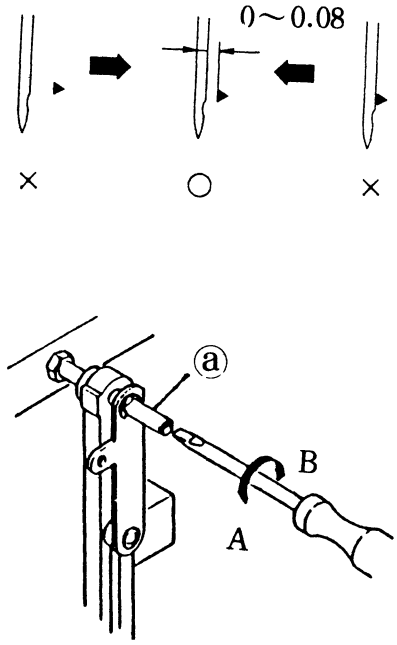

Adjust eccentric Pin ⓐ in A or B direction.

5. NEEDLE AND HOOK TIMING

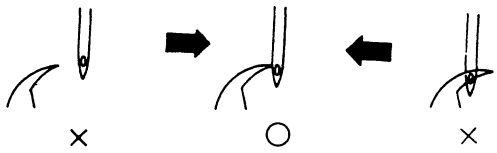

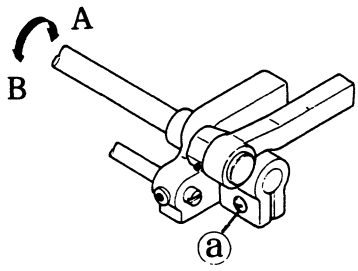

1) Raise the needle bar 2.1 mm from its lowest Position.
2) Loosen set Screw ⓐ of lower shaft crank.
3) Turn lower shaft in A or B direction to match the center of the needle and the point of the hook.
4) Tighten screw ⓐ lower shaft crank.

6. NEEDLE BAR HEIGHT

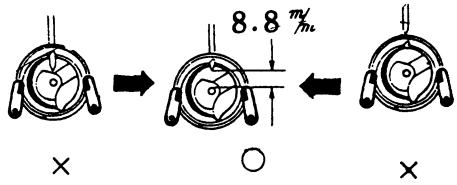

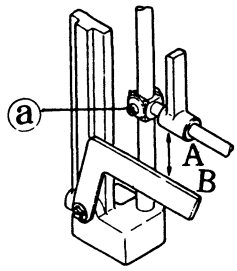

1) The needle bar goes down to its lowest position.
2) Loosen screw ⓐ .
3) Adjust the needle bar in A or B direction.
4) Tighten the screw ⓐ .

7. HEIGHT OF THE FEED DOG

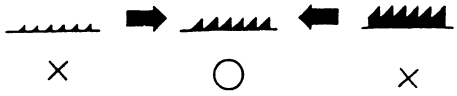

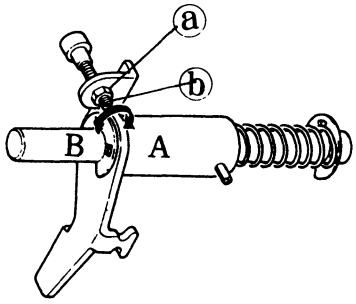

1) Loosen nut ⓐ .
2) Adjust the screw ⓑ in A or B direction.
3) Tighten nut ⓐ .

8.FEED TIMING

Check: Needle coming out of needle plate, feed dog even with plate and rising.

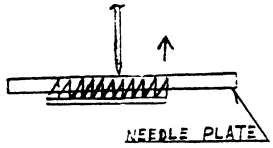

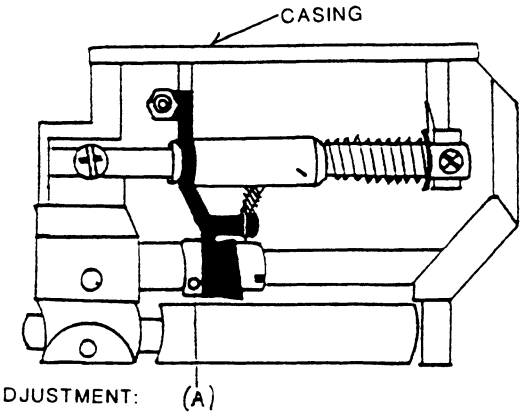

1. Remove the bottom free arm access plate.
2. Loosen the screw (A) in feed rising cam and rotate as needed :clockwise to lift, counter clockwise to lower.
3. Tighten screw (A) and replace base plate.

9. TENSION OF THE UPPER THREAD.

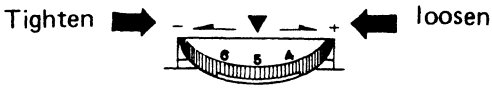

Tension: 110-140gr
(when # 60 cotton thread)

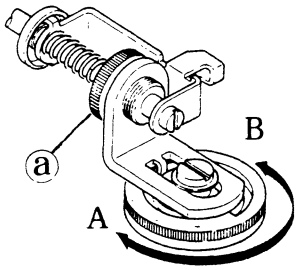

Adjust the nut ⓐ in A or B direction.

10. BAR TACK IN BUTTON HOLING.

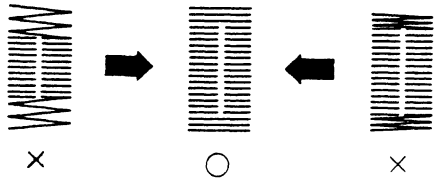

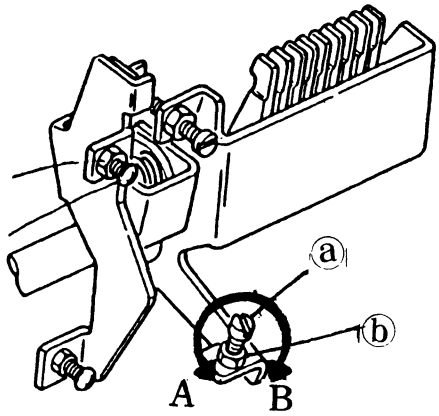

1) Do not touch nut ⓑ .
2) Adjust screw ⓐ in A or B direction.

11. STITCH LENGTH IN BUTTON HOLING.

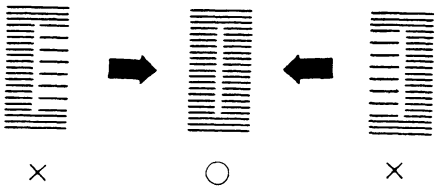

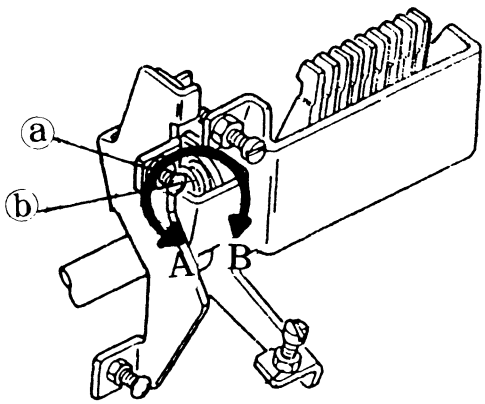

1) Do not touch nut ⓑ .
2) Adjust the screw ⓐ in A or B direction.

12. STRETCH STITCH LENGTH.

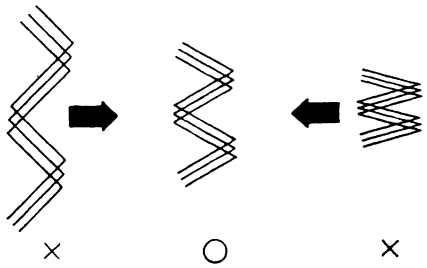

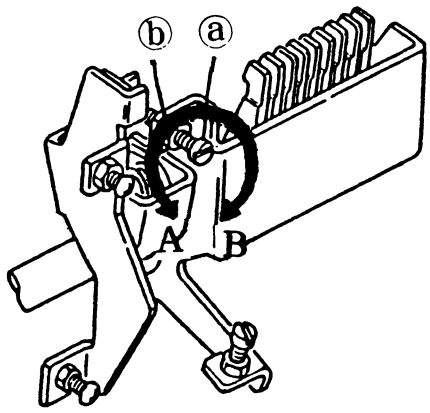

1) Do not touch nut ⓑ .
2) Adjust the screw ⓐ in A or B direction

13. MOTOR BELT TENSION.

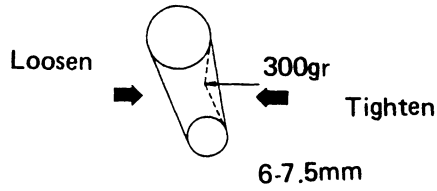

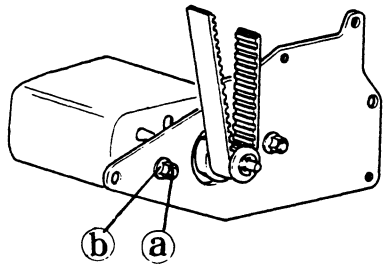

1) Loosen nut ⓐ .
2) Adjust the washer ⓑ .
3) Tighten nut ⓐ .

14. Bind Upper Shaft (Handweel) - Occurs mainly when machine has been handled roughly in shipping. In most cases other parts, or adjustments are not affected.

Checking: Remove top cover, (2 screws) and visually check to see if bushing (B) is against the casting (C) Fig. 1. The bushing should always be against the casting, if there is a space between bushing and casting, Fig. 2. Make adjustment as noted.

Adjustment: Loosen screw (E) slightly, place a punch on the end of the upper shaft. Give the punch a slight tap so it seats against casting, tighten screw (F) and replace top cover. Test for free wheel motion.

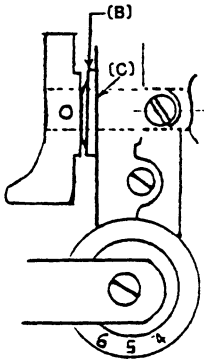

(Fig. 1)

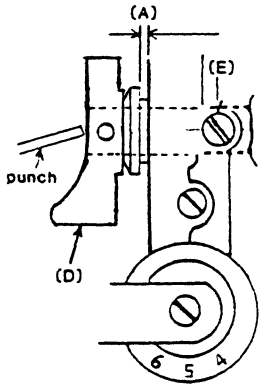

(Fig. 2)

Part No. 95049